BRIDGE FORMWORK DETAILS

A1

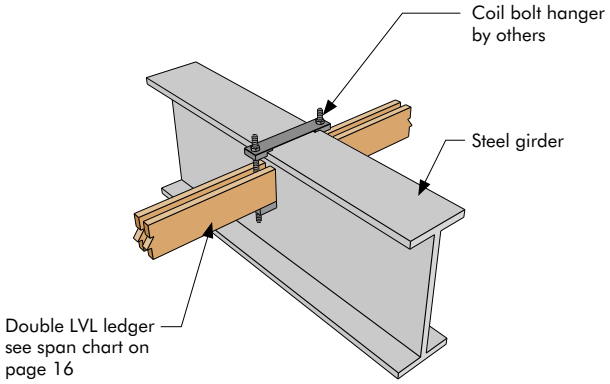

B1

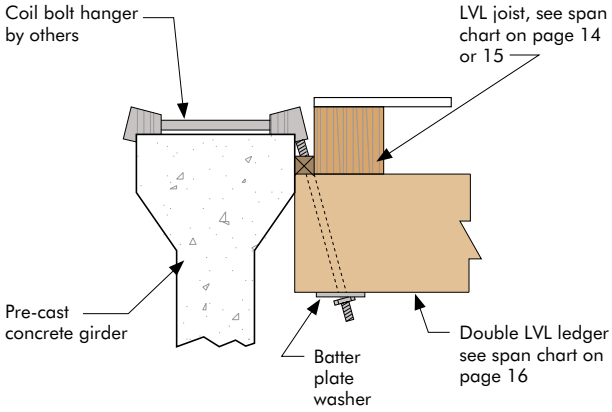

B2

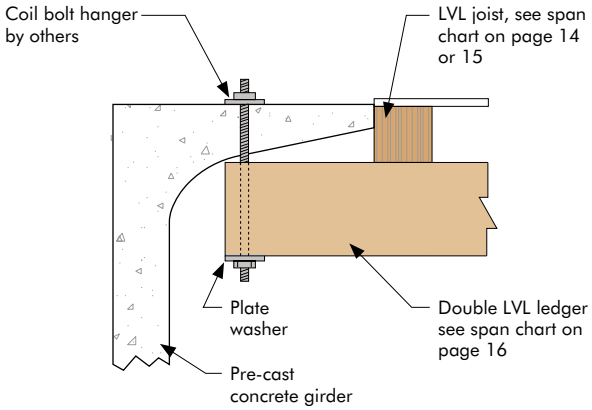
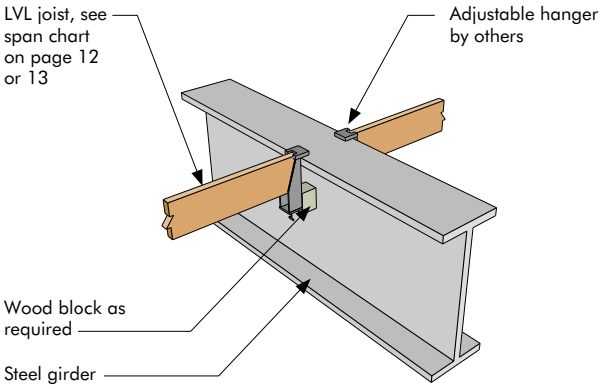
C1